MIXER FLATSPRAY 10 atomizer - Chassis

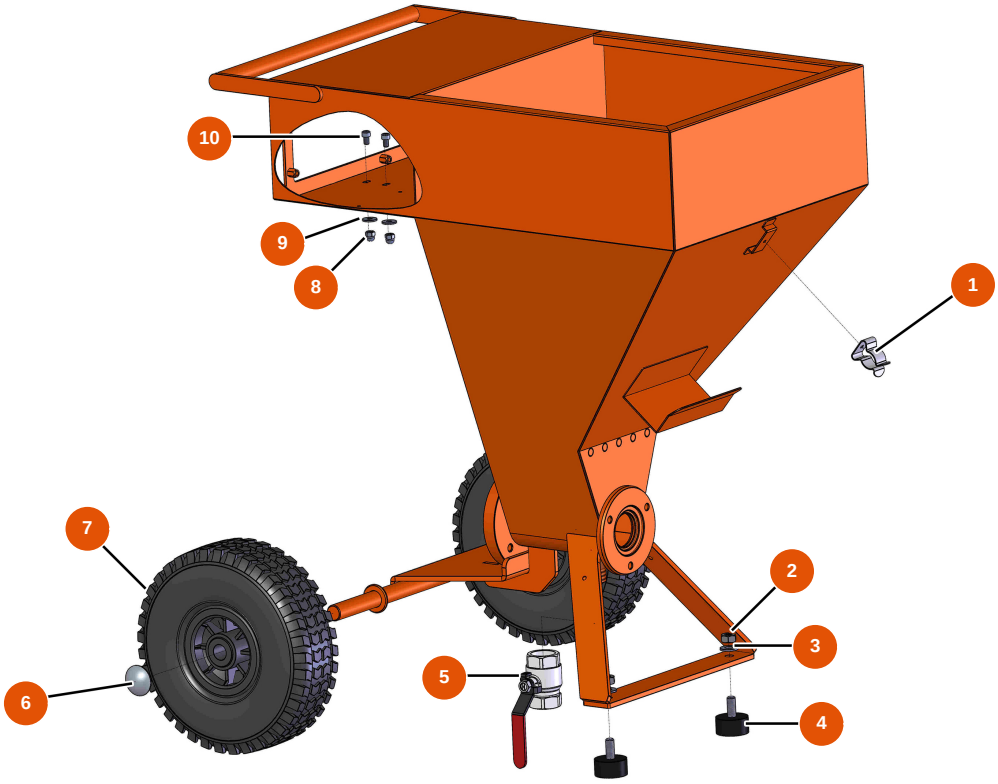

Détails des pièces

Pos.	Référence	Désignation
1	EU80582	1
2	EU13978	2
3	EU80261	ø 10 inox medium washer
4	EU30145	4
5	EU70031	5
6	EU90281	Ø20 chromed clip
7	EU80001	7
8	EU30330	M 6 Inox cap nut
9	EU30291	9
10	EU90798	10

Edited on 26/11/2026. Information provided for guidance only, non-contractual and subject to change without notice. In case of doubt, please contact us.

MIXER FLATSPRAY 10 atomizer - Transmission

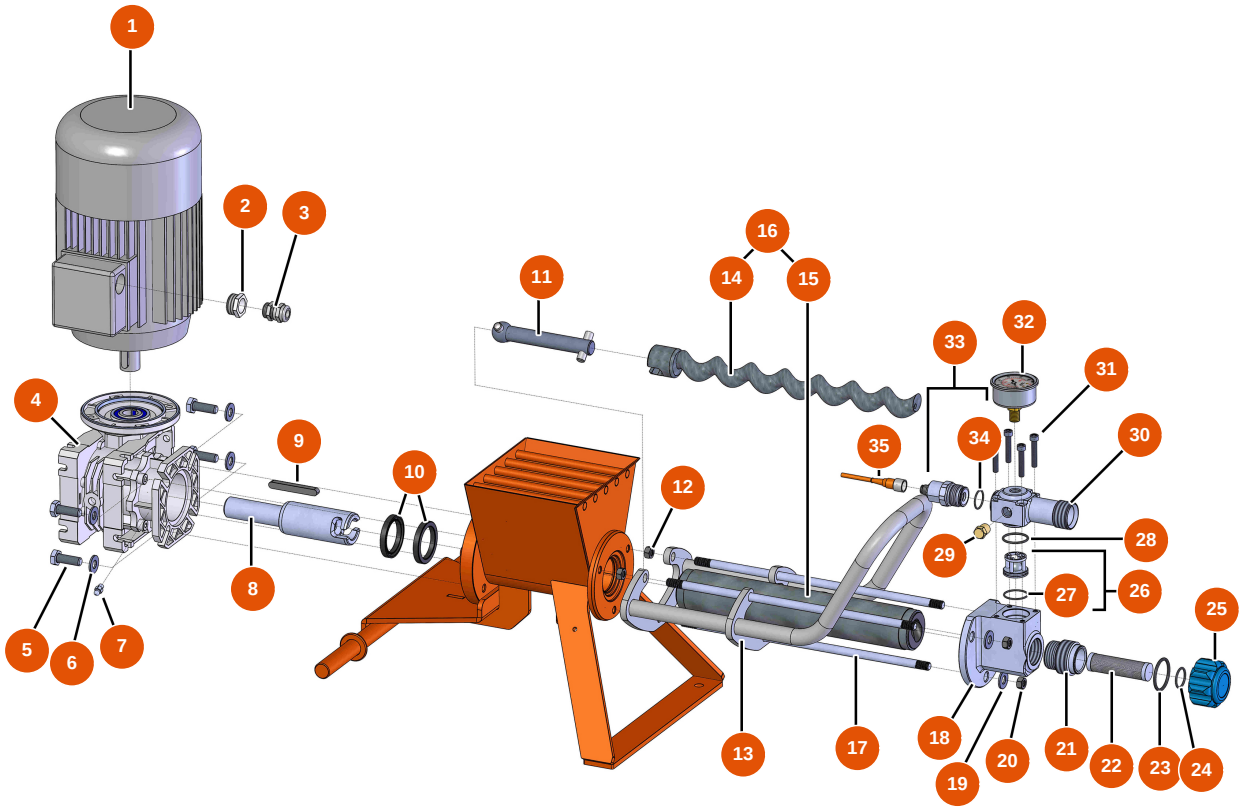

Détails des pièces

Pos.	Référence	Désignation
1	EU14148	1
2	EU80446	2
3	EU30040	3
4	EU14498	4
5	EU30257	5
6	EU30280	6
7	EU60012	7
8	EUM10645	8
9	EU90749	9
10	EU70062	10
11	EUM10649	11
12	EU13979	12
13	EUC22982	13

Edited on 26/11/2026. Information provided for guidance only, non-contractual and subject to change without notice. In case of doubt, please contact us.

Pos.	Référence	Désignation
14	7009107500	JET 1 rotor
15	3F00529800	JET 1 straight stator 70 SH
16	EU30542	16
17	EUM10226	17
18	EUM10727	18
19	EU80261	ø 10 inox medium washer
20	EU13978	20
21	EUM10782	21
22	EU30667	Filter 18 mesh
23	EU14766	23
24	EU14765	24
25	EUM10781	25
26	EU14789	26
27	EU14607	27
28	EU14764	28
29	EU90842	29
30	EUM10726	30
31	EU12567	31
32	EU12623	32
33	EU14788	33
34	EU14606	34
35	EU12409	35

Edited on 26/11/2026. Information provided for guidance only, non-contractual and subject to change without notice. In case of doubt, please contact us.

MIXER FLATSPRAY 10 atomizer - Electrical box

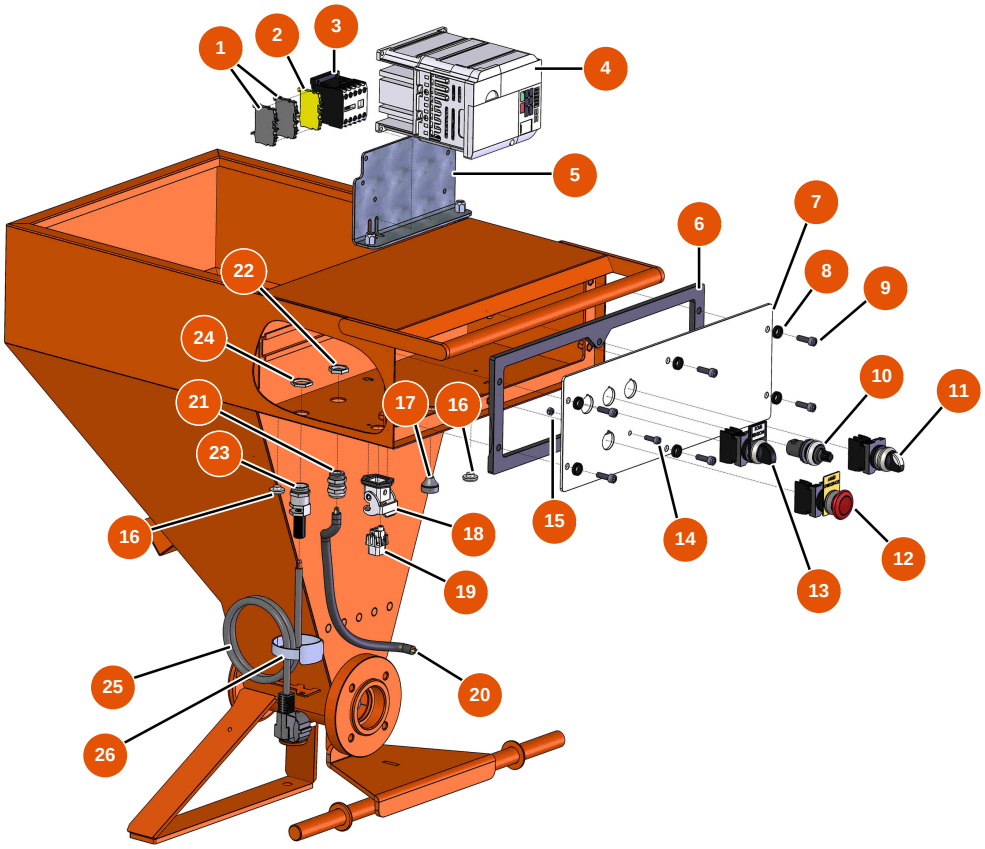

Détails des pièces

Pos.	Référence	Désignation
1	EU80467	1
2	EU30038	2
3	EU30011	3
4	EU12300	4
5	EU10002	5
6	EU10049	6
7	EU10006	7
8	EU80573	8
9	EU90996	6 x 20 inox cylindrical head screw
10	EU80645	Potentiometer for spraying machine
11	EU14180	11
12	EU90038	Emergency stop button Ø 22
13	EU30034	13

Edited on 26/11/2026. Information provided for guidance only, non-contractual and subject to change without notice. In case of doubt, please contact us.

Pos.	Référence	Désignation
14	EU90160	14
15	EU11880	15
16	EU80397	16
17	EU11564	17
18	EU11915	18
19	EU11914	19
20	EU90606	20
21	EU30040	21
22	EU30333	22
23	EU80450	23
24	EU30060	24
25	EU90180	25
26	EU12410	26

Edited on 26/11/2026. Information provided for guidance only, non-contractual and subject to change without notice. In case of doubt, please contact us.

MIXER FLATSPRAY 10 atomizer - Spray-gun

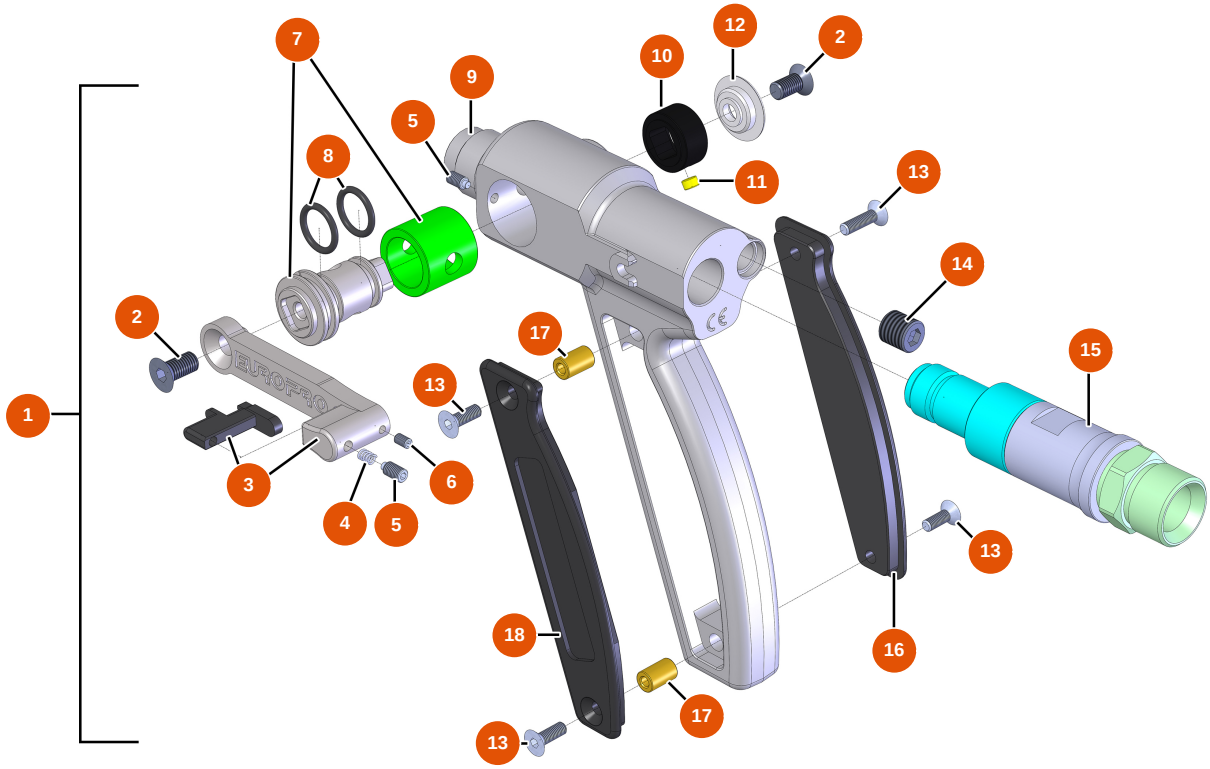

Détails des pièces

Pos.	Référence	Désignation
1	EU14797	New generation FLATSPRAY spray-gun, without nozzle holder & without nozzle
2	EU12849	2
3	EUM07029	Trigger Mixer Airless lance
4	EU13589	4
5	EU13598	5
6	EU12708	6
7	EU14222	7
8	EU11303	8
9	EUM10290	9
10	EUM10240	10
11	EU13031	11
12	EUM10303	12
13	EU13912	13

Edited on 26/11/2026. Information provided for guidance only, non-contractual and subject to change without notice. In case of doubt, please contact us.

Pos.	Référence	Désignation
14	EU14793	14
15	EUM07056	Turning connector for Mixer Airless lance
16	EUM10239	16
17	EUM10242	17
18	EUM10238	18

Edited on 26/11/2026. Information provided for guidance only, non-contractual and subject to change without notice. In case of doubt, please contact us.

MIXER FLATSPRAY 10 atomizer - Hose



Détails des pièces

Pos.	Référence	Désignation
1	EU14801	ø 16 x 10 m product hose, quick couplings F1" x F1/2" FLATSPRAY
2	EU14799	2
3	EU13651	3
4	EU14798	4

Edited on 26/11/2026. Information provided for guidance only, non-contractual and subject to change without notice. In case of doubt, please contact us.