MIXER 100 sequential mixer - Chassis

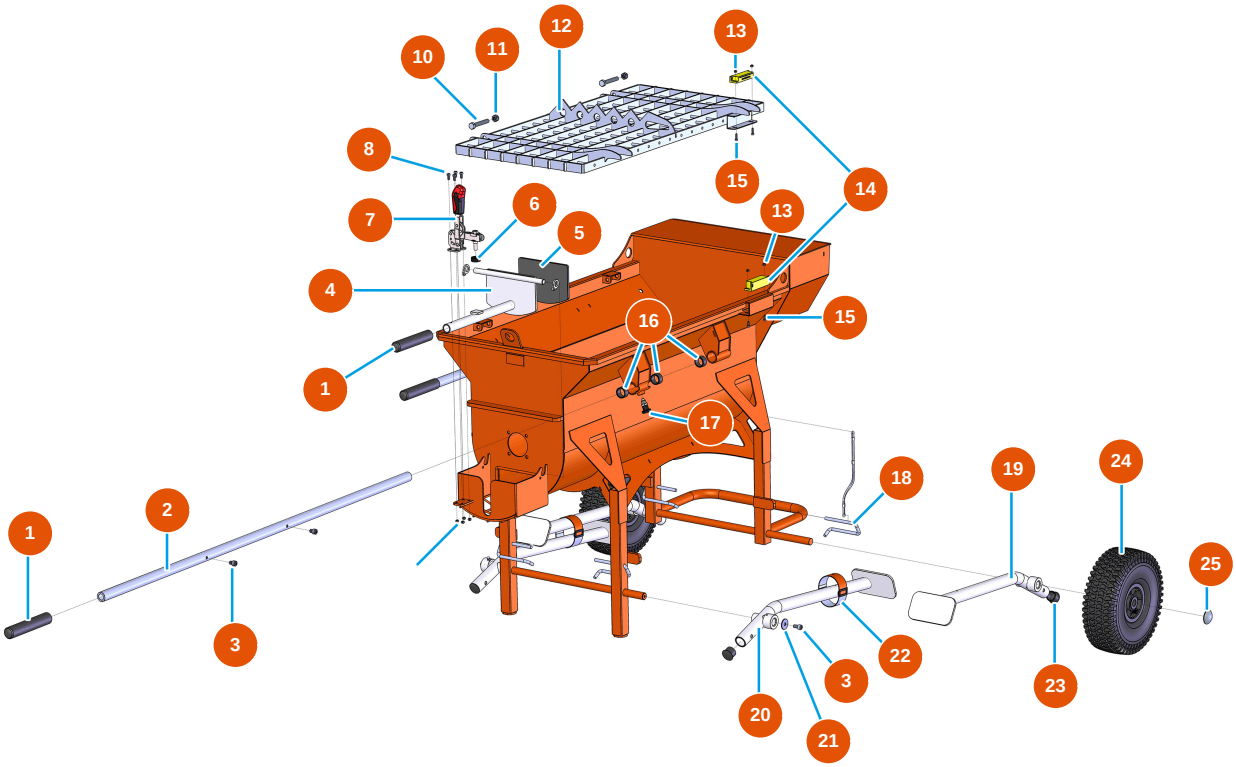

Détails des pièces

Pos.	Référence	Désignation
1	EU90255	1
2	EUC21327	2
3	EU90151	3
4	EUC20201	4
5	EU12231	5
6	EU12219	6
7	EU12142	7
8	EU90161	M5 x 12 cylindrical head screw - CP 60 cylindrical head screw
10	EU12163	10
11	EU13981	11
12	EUC20200	12
13	EU30266	13
14	EU12120	14

Edited on 26/11/2026. Information provided for guidance only, non-contractual and subject to change without notice. In case of doubt, please contact us.

Pos.	Référence	Désignation
15	EU90137	15
16	EU13453	16
17	EU13454	17
18	EUC20226	18
19	EUC20202	19
20	EUC20204	20
21	EU80263	21
22	EU12204	22
23	EU13693	23
24	EU90692	24
25	EU90282	25

Edited on 26/11/2026. Information provided for guidance only, non-contractual and subject to change without notice. In case of doubt, please contact us.

MIXER 100 sequential mixer - Transmission

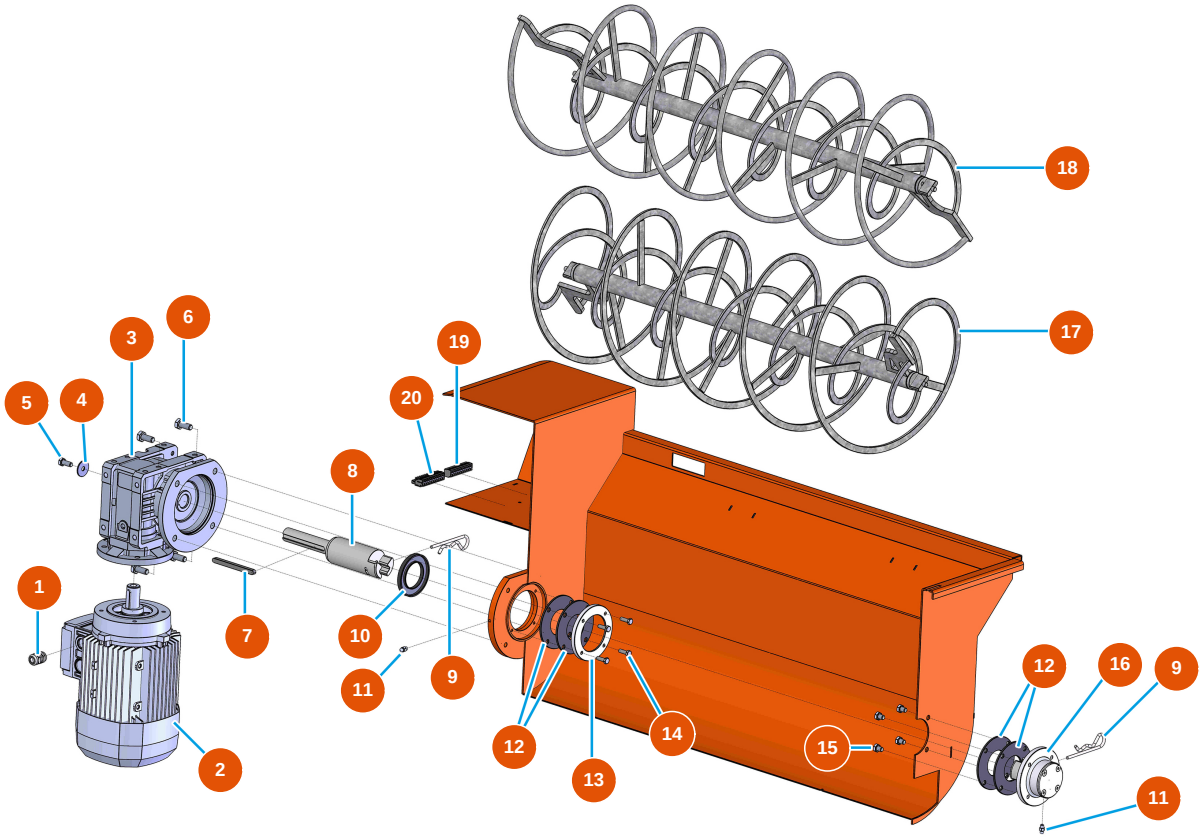

Détails des pièces

Pos.	Référence	Désignation
1	EU1002837	1
2	EU90189	2
3	EU30277	3
4	EU80263	4
5	EU30273	5
6	EU30257	6
7	EU90750	7
8	EUM10063	8
8	EU12157	8
9	EU70107	9
9	EU12157	9
10	EU60012	10
11	EU12042	11

Edited on 26/11/2026. Information provided for guidance only, non-contractual and subject to change without notice. In case of doubt, please contact us.

Pos.	Référence	Désignation
11	EU60012	11
12	EUM10065	12
12	EU12042	12
13	EUM10065	13
14	EU14539	14
15	EU30298	15
16	EUM07013	16
17	EUC20231	17
18	EUC22367	18
19	EU11771	19
20	EU11772	20

Edited on 26/11/2026. Information provided for guidance only, non-contractual and subject to change without notice. In case of doubt, please contact us.

MIXER 100 sequential mixer - Hydraulic circuit

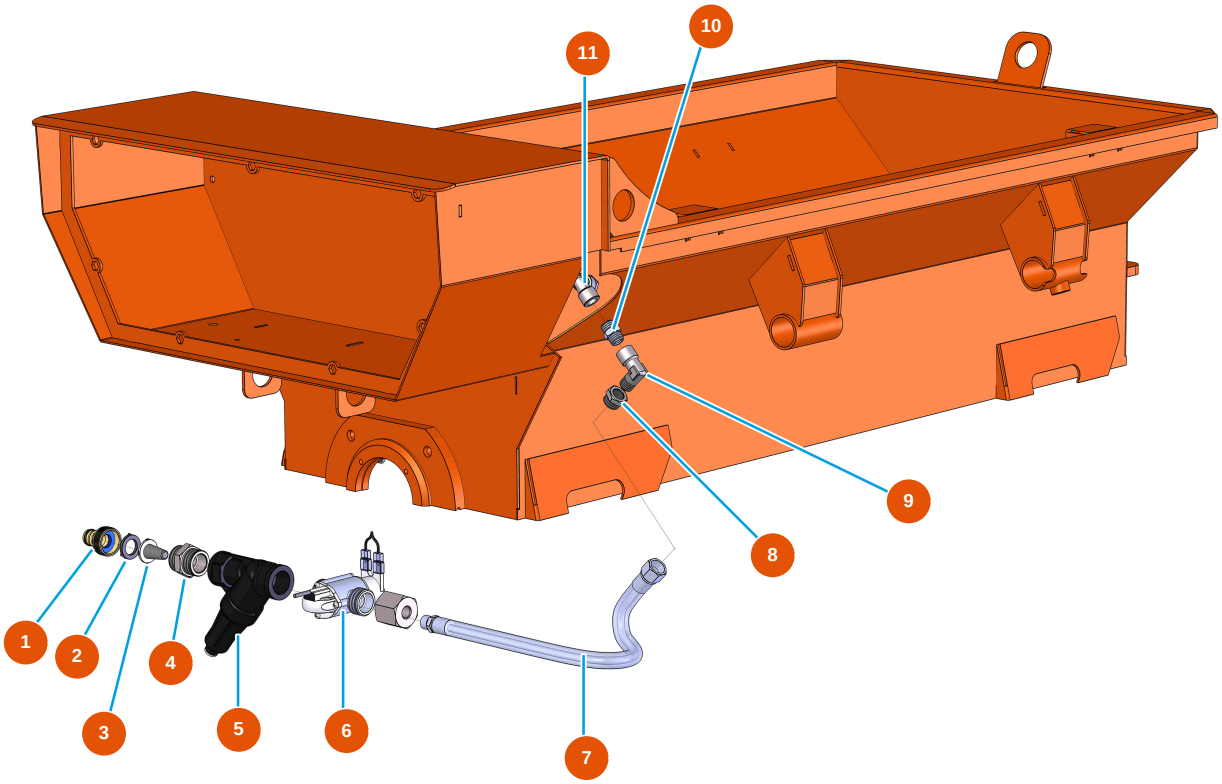

Détails des pièces

Pos.	Référence	Désignation
1	EU80124	1
2	EU11618	2
3	EU80128	3
4	EU12589	4
5	EU12066	5
6	EU14241	6
7	EU12280	7
8	EU90242	8
9	EU30121	9
10	EU90844	10
11	EU11669	11

Edited on 26/11/2026. Information provided for guidance only, non-contractual and subject to change without notice. In case of doubt, please contact us.

MIXER 100 sequential mixer - Electrical box

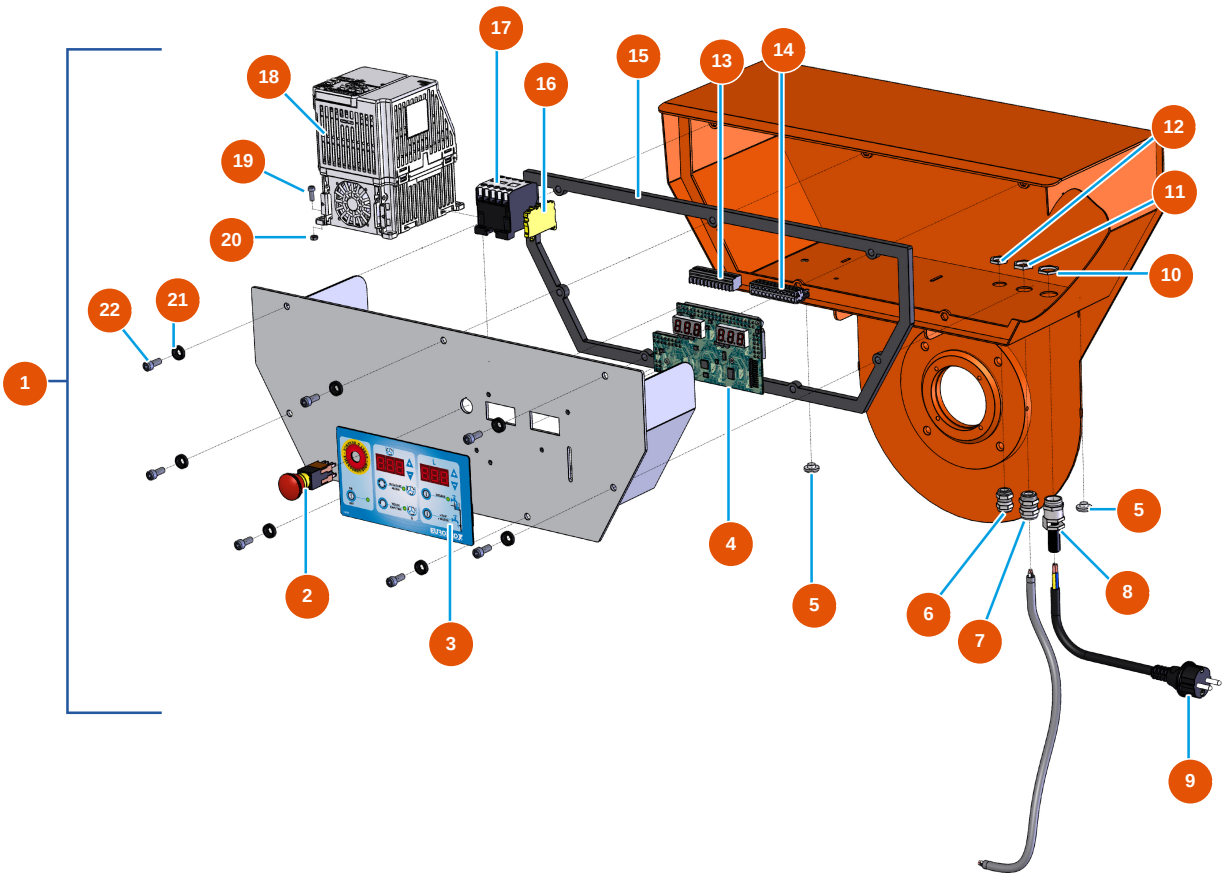

Détails des pièces

Pos.	Référence	Désignation
1	EU13025	1
2	EU13015	2
3	EU13007	3
4	30673	4
5	80397	5
5	EU80397	5
6	EU80445	6
7	EU30040	7
8	EU80451	Brass cable gland of 13 for power cable
9	EU90214	Power cable with molded plug 3G 2,5 mm²
10	EU30054	10
11	EU30333	11
12	EU11327	12

Edited on 26/11/2026. Information provided for guidance only, non-contractual and subject to change without notice. In case of doubt, please contact us.

Pos.	Référence	Désignation
13	EU11771	13
14	EU11772	14
15	12138	15
16	30038	16
17	EU11918	17
18	EU80458	18
19	EU12444	19
20	EU10038	20
21	EU80573	21
22	EU90157	22

Edited on 26/11/2026. Information provided for guidance only, non-contractual and subject to change without notice. In case of doubt, please contact us.