MIXER VERTIGO electric trowel - 230 V - Storage box

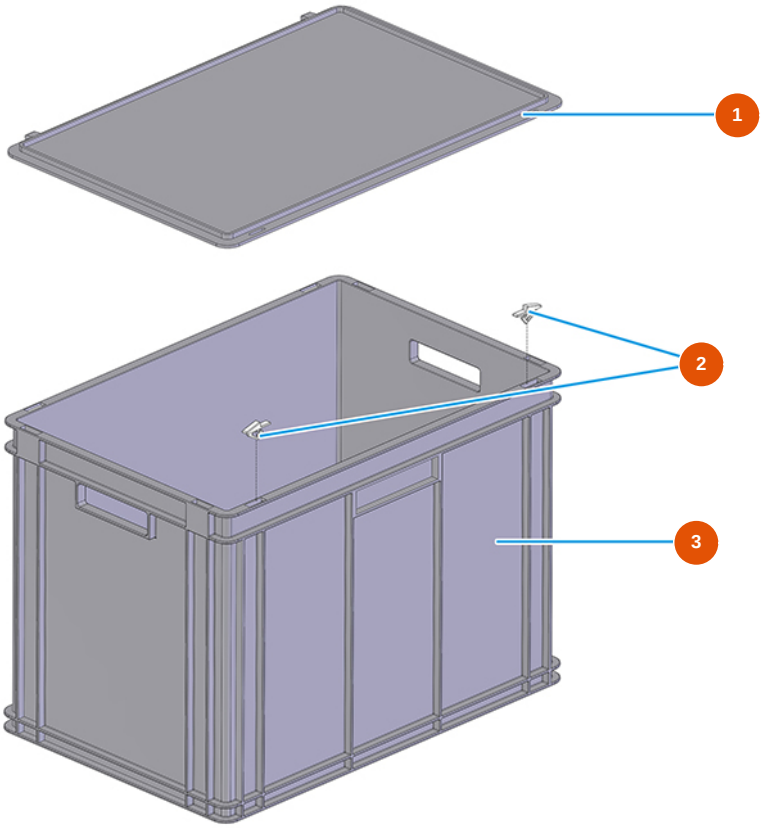

Détails des pièces

Pos.	Référence	Désignation
1	3U00500703	Cover storage box Athena for trowel
2	3U00500704	Latches Athena for Vertigo
3	3U00500700	Storage box Athena for VERTIGO trowel

Edited on 26/11/2026. Information provided for guidance only, non-contractual and subject to change without notice. In case of doubt, please contact us.

MIXER VERTIGO electric trowel - 230 V - Water Group

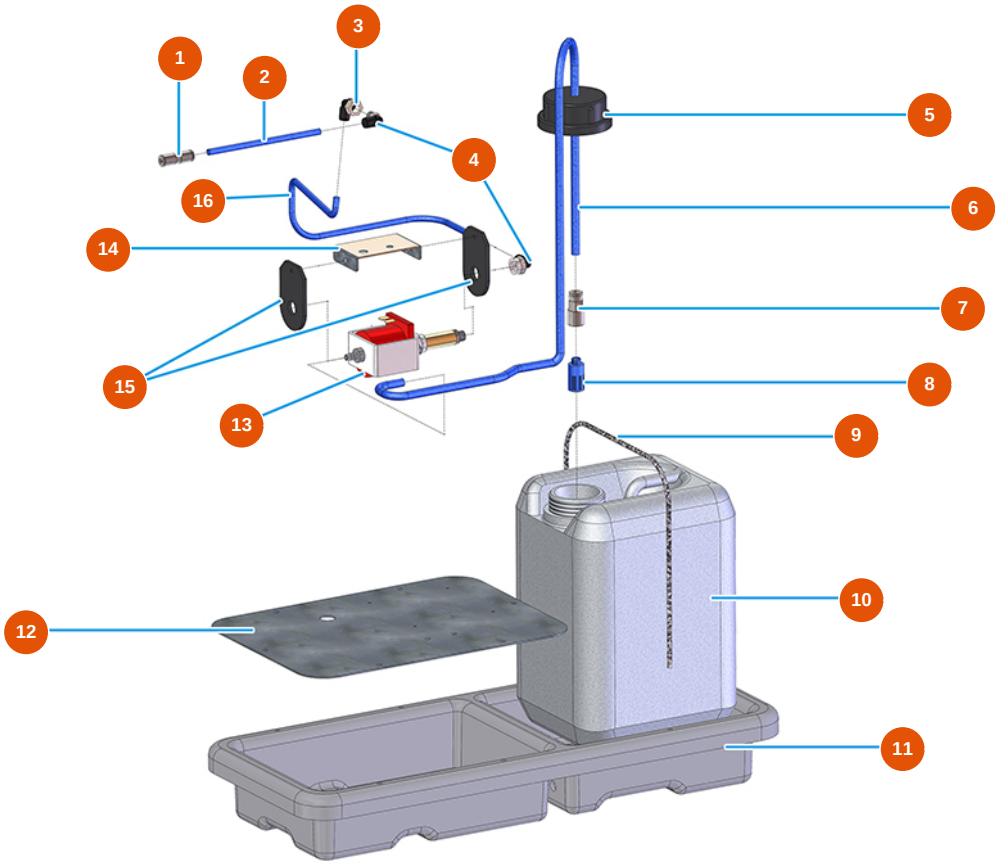

Détails des pièces

Pos.	Référence	Désignation
1	3G50200502	Legris joint straight
2	3G50500203	Hose 4X2 RILSAN
3	3G50200202	Legris coupling elbow joint 6X1/8
4	3G50400201	Air connection 90GR M 1/8
5	3M00500125	Jerry can top for VERTIGO
6	3G50500103	ELASTOLLAN hose 10 x 8
7	3G50200108	Legris coupling in-line 8 X 1/4 fem.
8	3M00500115	Water filter VERTIGO
9	3M00500201	Elastic rope MARE MM 6
10	3M00500124	5 LT tank GR.250 neutral VERTIGO
11	3M00500404	Half-shell VERTIGO
12	4902020000	Galvanized bottom plate
13	3M00301501	Water pump 24V ME023

Edited on 26/11/2026. Information provided for guidance only, non-contractual and subject to change without notice. In case of doubt, please contact us.

Pos.	Référence	Désignation
14	4902020200	VERTIGO galv. pump holder plate
15	3M00301502	Stand. antivibrating for pump
16	3G50500100	Hose ELASTOLLAN 6X4

Edited on 26/11/2026. Information provided for guidance only, non-contractual and subject to change without notice. In case of doubt, please contact us.

MIXER VERTIGO electric trowel - 230 V - Electrical Group

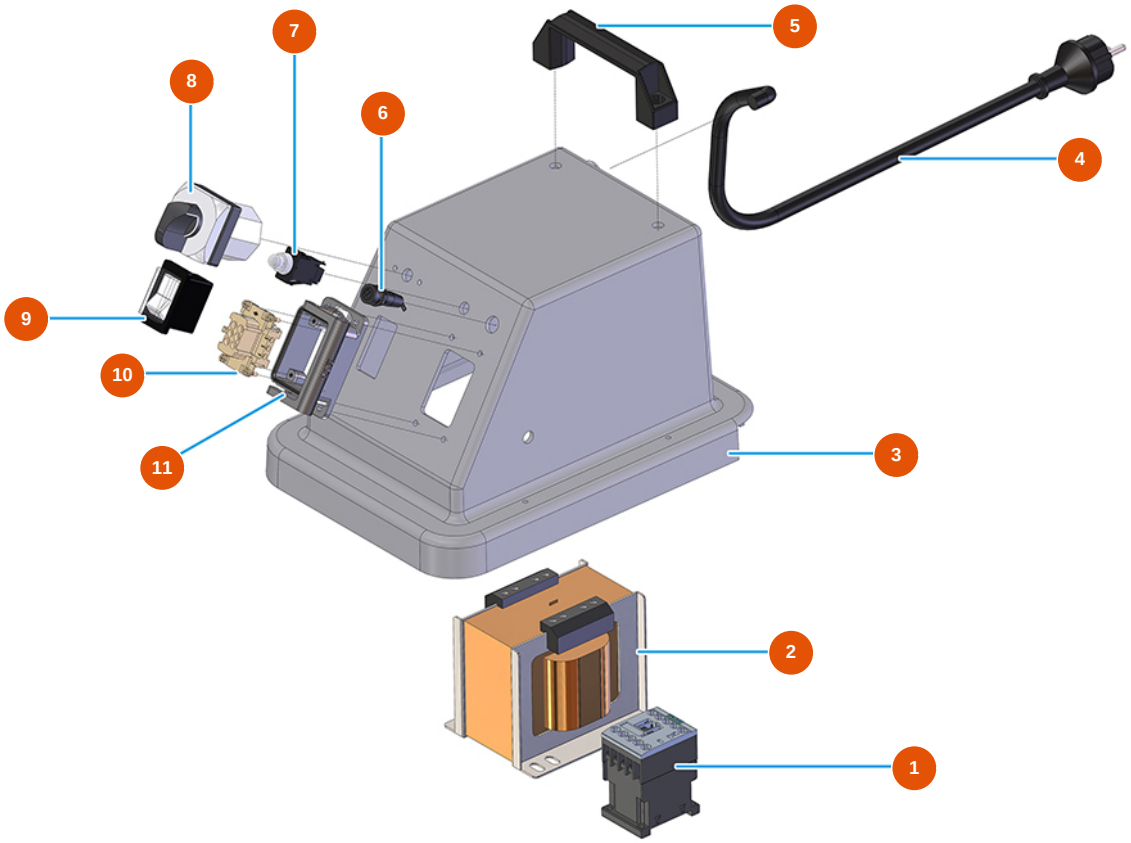

Détails des pièces

Pos.	Référence	Désignation
1	3C00700117	Counter 4 KW 24V AC SIEMENS
2	3C00502025	Trowel transformer VERTIGO 3 speeds
3	3M00500405	Half-shell cover trowel VERTIGO
4	3M00501200	SCHUKO plug with trowel power cable VERTIGO
5	3M00500114	Lifting handle
6	3C05050900	Fuse holder P4000 VERTIGO trowel
7	3C00800800	Thermoprotector VERTIGO trowel
8	3M00300403	Gradual trowel switch VERTIGO
9	3M00500111	Main switch trowel VERTIGO
10	3C02700300	6-pin 16A female insert
11	3C02800503	Socket base 6 pin TCHI 06 L

Edited on 26/11/2026. Information provided for guidance only, non-contractual and subject to change without notice. In case of doubt, please contact us.

MIXER VERTIGO electric trowel - 230 V - Motor Group

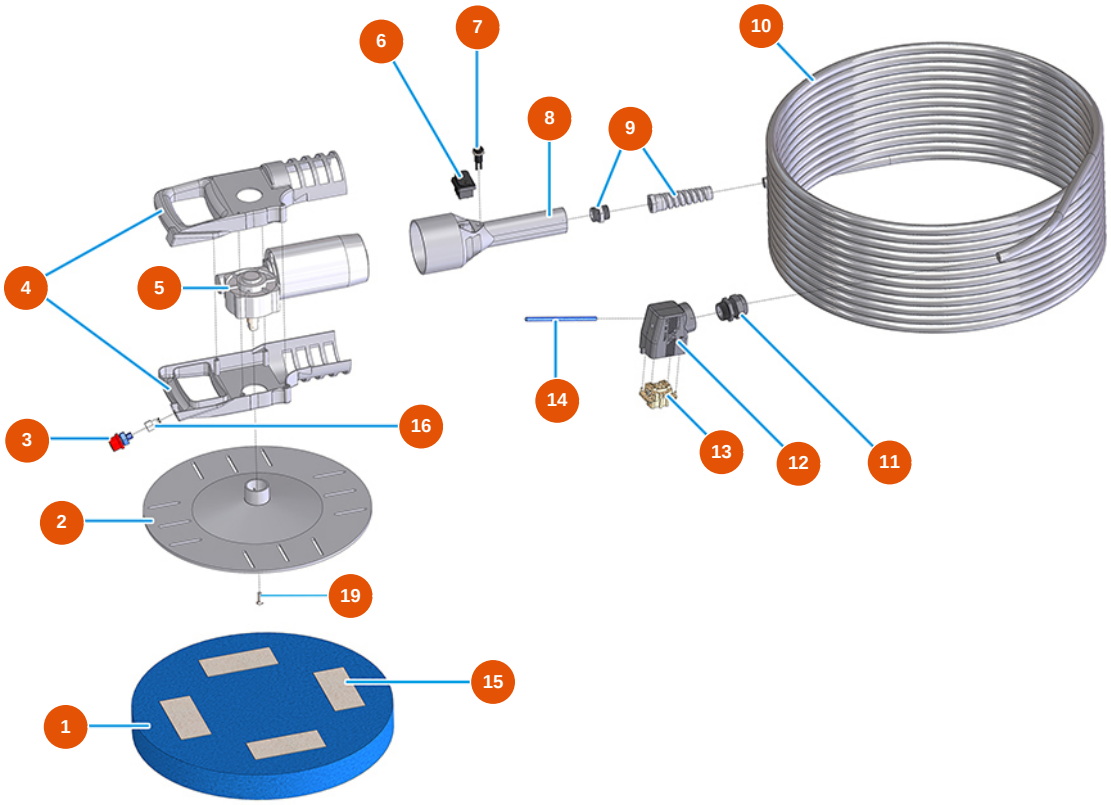

Détails des pièces

Pos.	Référence	Désignation
1	3M00300201	Brown sponge 400 x 50 medium-hard
2	3M00500407	Trowel disk VERTIGO
3	3M00500102	Water spray MIXER
4	3M00500402	Handle LH -RH VERTIGO trowel
5	3M00500110	Gear motor VERTIGO
6	3M00500104	Start / stop trowel switch VERTIGO
7	3M00500121	Water pump button
8	3M00500400	Grip for VERTIGO
9	3M00302101	Big cable gland MP006
10	8007015000	Trowel cable VERTIGO
11	3C04200203	Anti-tear cable gland M25X1.5E51201100
12	3C02800601	Cover TMAO 06 L25
13	3C03100500	6-pin 16A male insert

Edited on 26/11/2026. Information provided for guidance only, non-contractual and subject to change without notice. In case of doubt, please contact us.

Pos.	Référence	Désignation
14	3G50500203	Hose 4X2 RILSAN
15	3M00300160	Velcro female
16	3G50200110	F coupling 4X1/8 for VERTIGO trowel
19	3T02601601	19

Edited on 26/11/2026. Information provided for guidance only, non-contractual and subject to change without notice. In case of doubt, please contact us.