MIXER LIGHT plaster continuous mixing machine - 2,2 kW - General view

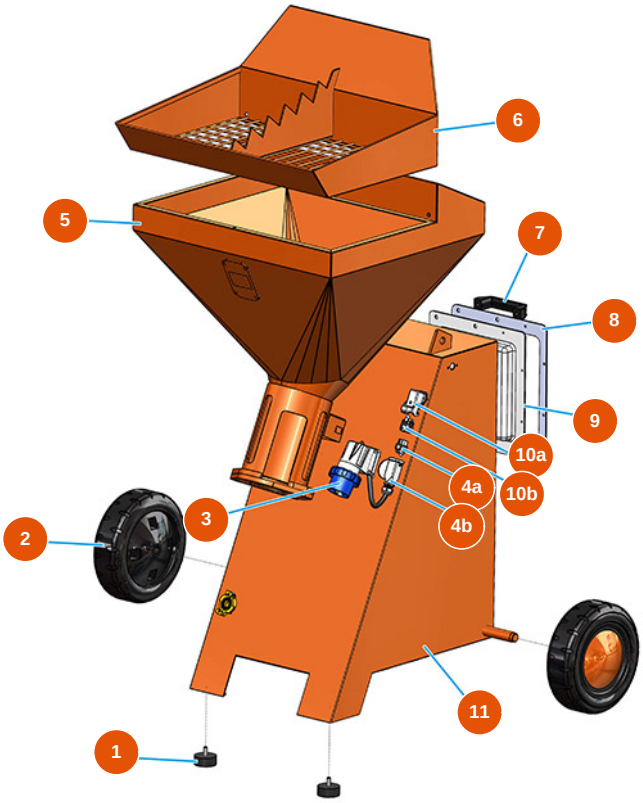

Détails des pièces

Pos.	Référence	Désignation
1	3T00200309	Anti-vibration foot 50X20M10X2
2	3F00300208	Wheel Ø260/85 mm rubber
3	3C03000103	2-pin + ground 16A surface-mount male plug
4a	3C02800102	Cover ILME CK03V PG11 without hook
4b	3C03100200	4-pin + ground CKM04 male insert
5	701202910A	5
6	701750800A	Bag Cutter Grid for LIGHT
7	3M00500114	Lifting handle
8	404400280A	Control panel frame LIGHT
9	4044001200	Control panel cover LIGHT 2013
10a	3C02800500	Bend socket base CK03IA
10b	3C02700200	4-pin + ground 10A female insert
11	701203000A	Trolley LIGHT 2013

Edited on 27/11/2026. Information provided for guidance only, non-contractual and subject to change without notice. In case of doubt, please contact us.

MIXER LIGHT plaster continuous mixing machine - 2,2 kW - Air group

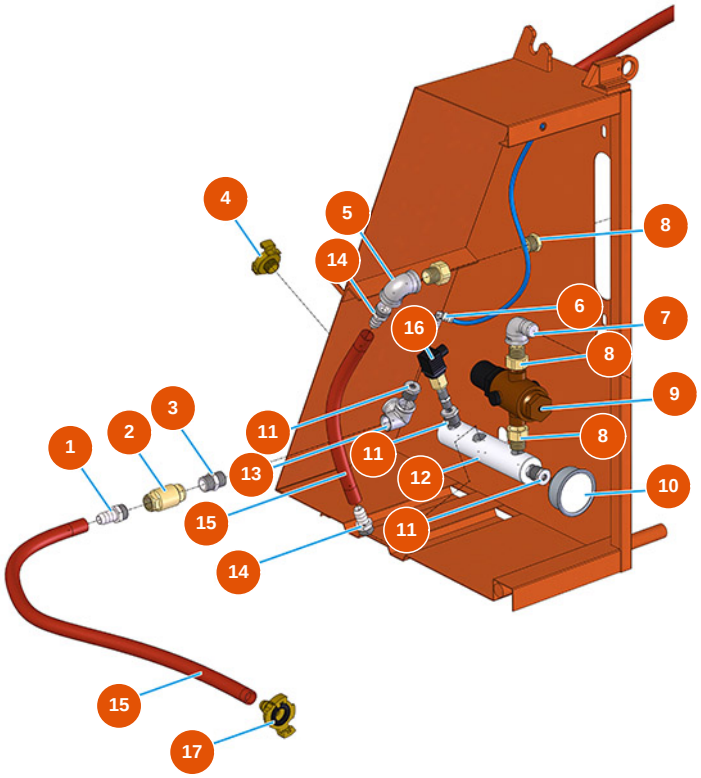

Détails des pièces

Pos.	Référence	Désignation
1	3G50300202	Hose connector 3/8"X14"
2	3G01300401	Valve RITEGNO EUROPA 3/8"
3	3G50300700	Steel reduced nipple 1/2X3/8
4	3A00100302	Male Geka coupling 1/2"
5	3G00509002	Elbow join galvanized 90° FF FIG.90 1/2"
6	3G50200202	Legris coupling elbow joint 6X1/8
7	3G00509202	Elbow join galvanized 90° MF FIG.92 1/2"
8	3G01700300	3 piece connector MF (I1)
9	3G00904100	Pressure reducer 1/2
10	3G00100141	Axial manometer 0-10 bar
11	3G50300100	Steel reduction 1/2X1/4
12	4044002500	12
13	3G00522102	Elbow outlet galvanized FIG.221 1/2

Edited on 27/11/2026. Information provided for guidance only, non-contractual and subject to change without notice. In case of doubt, please contact us.

Pos.	Référence	Désignation
14	3G50300200	Hose connector 1/2"X14"
15	3F00700201	PVC/rubber hose 13×19 (without Geka)
16	3G00403106	Pressure switch PT/5 0,6-2 BAR ITALT
17	3A00100102	PG15 Geka coupling 1/2"

Edited on 27/11/2026. Information provided for guidance only, non-contractual and subject to change without notice. In case of doubt, please contact us.

MIXER LIGHT plaster continuous mixing machine - 2,2 kW - Water group

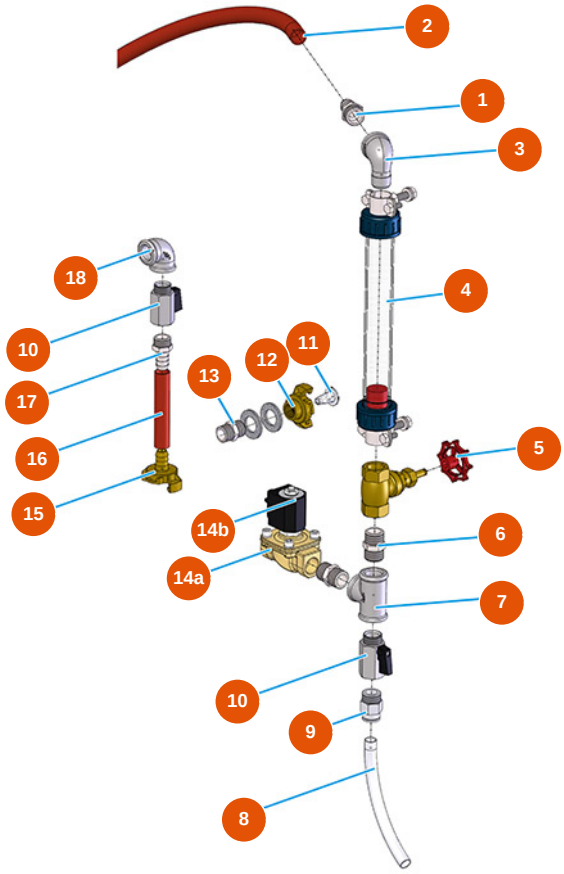

Détails des pièces

Pos.	Référence	Désignation
1	3G50300200	Hose connector 1/2"X14"
2	3F00700201	PVC/rubber hose 13×19 (without Geka)
3	3G00509202	Elbow join galvanized 90° MF FIG.92 1/2"
4	3G01101001	60-600 L/h flowmeter
5	3G01300211	Needle adjustment valve 1/4"
6	3G00528002	Galvanized nipple FIG.280 1/2
7	3G00513002	Galv. T-joint FIG.130 1/2
8	3G50500200	Hose 12X14 RILSAN
9	3G50200101	Legris joint straight 1/2X14 3175
10	3G01200301	Ball valve MF1/2" hexagonal
11	3A00100600	Inox water filter
12	3A00100202	Female Geka coupling 1/2"
13	3G00528002	Galvanized nipple FIG.280 1/2

Edited on 27/11/2026. Information provided for guidance only, non-contractual and subject to change without notice. In case of doubt, please contact us.

Pos.	Référence	Désignation
14a	3G00301300	Electrovalve NC 1/2
14b	3G00301401	Coil 230VAC
15	3A00100102	PG15 Geka coupling 1/2"
16	3F00700201	PVC/rubber hose 13×19 (without Geka)
17	3G50300200	Hose connector 1/2"X14"
18	3G00509002	Elbow join galvanized 90° FF FIG.90 1/2"

Edited on 27/11/2026. Information provided for guidance only, non-contractual and subject to change without notice. In case of doubt, please contact us.

MIXER LIGHT plaster continuous mixing machine - 2,2 kW - Mixing group

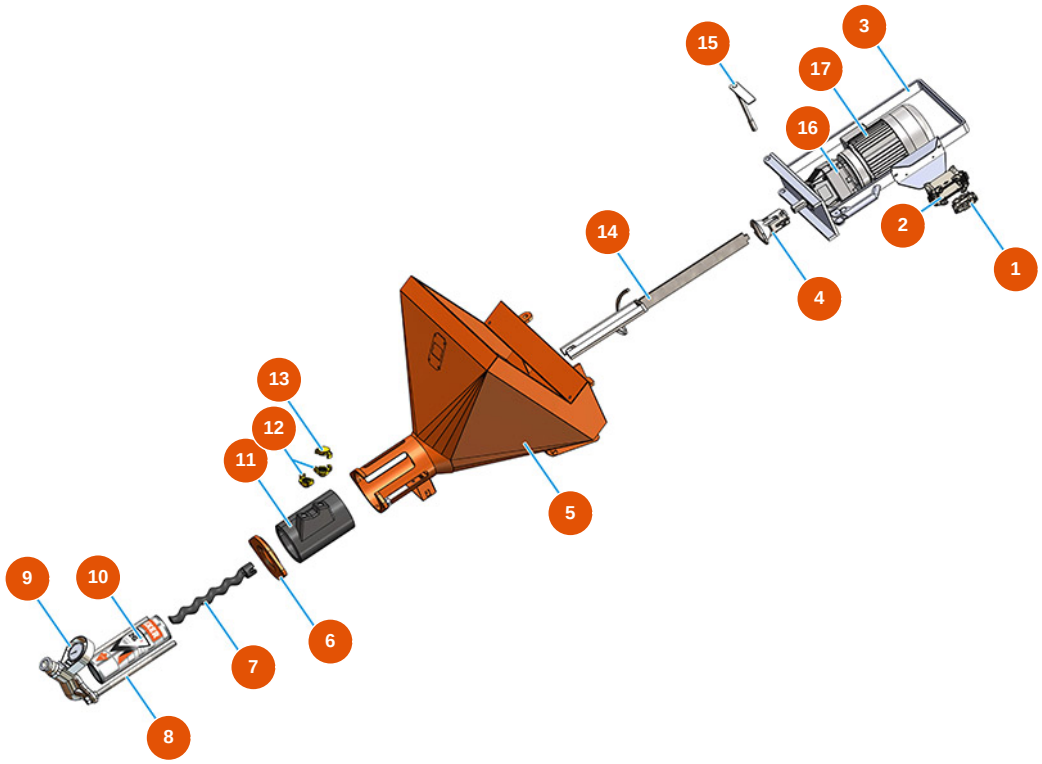

Détails des pièces

Pos.	Référence	Désignation
1	3C03100400	4/2-pin 80A male insert
2	3C02800400	16-pin surface-mount cover with 2 levers
3	701101400G	Motor support for MIXER LIGHT
4	700600650S	Motor coupling for PLUS MONO, SPRINTER and REMIX - h=25 - Ø20
5	701202910A	5
6	400210230A	Support for mixing chamber MIXER PLUS vers. 2020
7	7009012000	MIXER 26 rotor
8	8023003000	Tie rod M16 L = 350 F55 / 55 + screws
9	8012006000	Pump flange for SPRINTER and LIGHT
10	3F00501300	MIXER 26 straight stator - D4-2
11	4002103000	Polyurethane mixing chamber for MIXER PLUS and SPRINTER vers. 2020
12	3A00100401	Geka plug
13	3A00100303	Male Geka coupling 3/4"

Edited on 27/11/2026. Information provided for guidance only, non-contractual and subject to change without notice. In case of doubt, please contact us.

Pos.	Référence	Désignation
14	7003027000	Mixing shaft for MIXER LIGHT
15	7018008000	Mounting trunnion flange LIGHT 2013
16	3D00310101	Mixing chamber reducer for MIXER LIGHT, PLUS MONO, SPRINTER and CD 25
17	3D00200710	Mixing chamber three-phased 2,2 kW motor

Edited on 27/11/2026. Information provided for guidance only, non-contractual and subject to change without notice. In case of doubt, please contact us.

MIXER LIGHT plaster continuous mixing machine - 2,2 kW - Electric panel

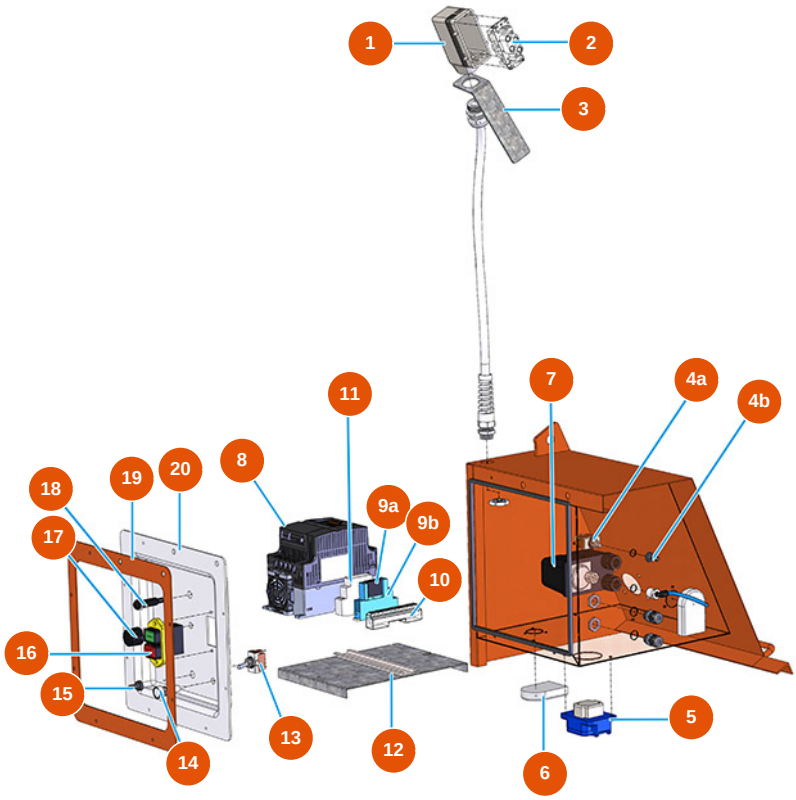

Détails des pièces

Pos.	Référence	Désignation
1	3C02800100	Horizontal 16-pin cover
2	3C02700600	4/2-pin 80A female insert
3	4906512000	Plate 40X190 support plug ILME
4a	3C01800402	Lever commutator switch T315N-A ON-ON
4b	3C02100100	Rubber protection for switch
5	3C02601001	Interlocking socket SCHUKO PALAZZOLI
6	3C00130101	Basic ventilation kit APO 71 (2 PE)
7	3G00403106	Pressure switch PT/5 0,6-2 BAR ITALT
8	3C05100107	Mono inverter 230V 2,2Kw MOSQUITO/PLUS
9a	3C00600800	Relay 2SC JW2 SN 24VDC
9b	3C00600904	Relay socket FINDER 95.05 SPA
10	3C00400700	10-way ground clamp
11	3C00600210	Relay 22.32.0.230.4340 FINDER

Edited on 27/11/2026. Information provided for guidance only, non-contractual and subject to change without notice. In case of doubt, please contact us.

Pos.	Référence	Désignation
12	4044002400	12
13	3C01800800	Commutator switch 1-0-1 T215 T-A
14	3C02400900	White light alarm 230V SIGNALUX
15	3C02100100	Rubber protection for switch
16	3C01403000	Bipolar switch 230V
17	3C00300101	Simple linear potentiometer 5K
18	3M00500121	Water pump button
19	404400280A	Control panel frame LIGHT
20	4044001200	Control panel cover LIGHT 2013

Edited on 27/11/2026. Information provided for guidance only, non-contractual and subject to change without notice. In case of doubt, please contact us.

MIXER LIGHT plaster continuous mixing machine - 2,2 kW - Pump group

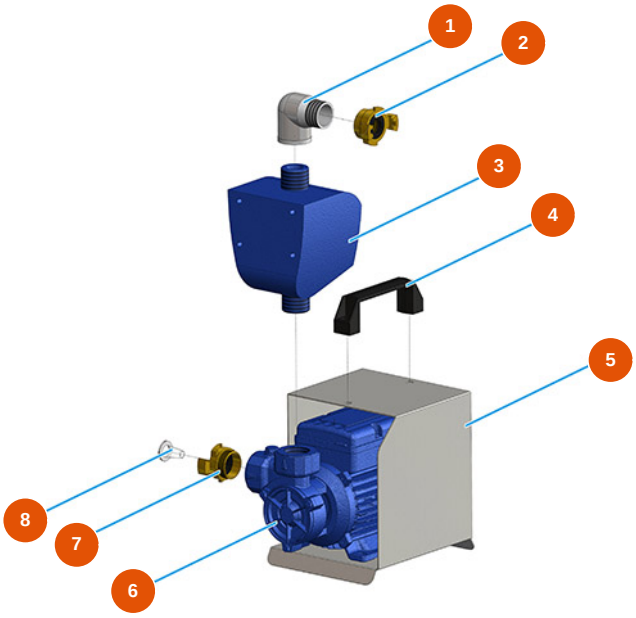

Détails des pièces

Pos.	Référence	Désignation
1	3G00509204	Elbow join galvanized 90° MF FIG.92 1"
2	3A00100204	Female Geka coupling 1"
3	3C06000100	3
4	3M00500114	Lifting handle
5	4044002900	5
6	3D00703001	Water pump for PLUS MONO and SPRINTER
7	3A00100303	Male Geka coupling 3/4"
8	3A00100600	Inox water filter

Edited on 27/11/2026. Information provided for guidance only, non-contractual and subject to change without notice. In case of doubt, please contact us.

MIXER LIGHT plaster continuous mixing machine - 2,2 kW - Compressor

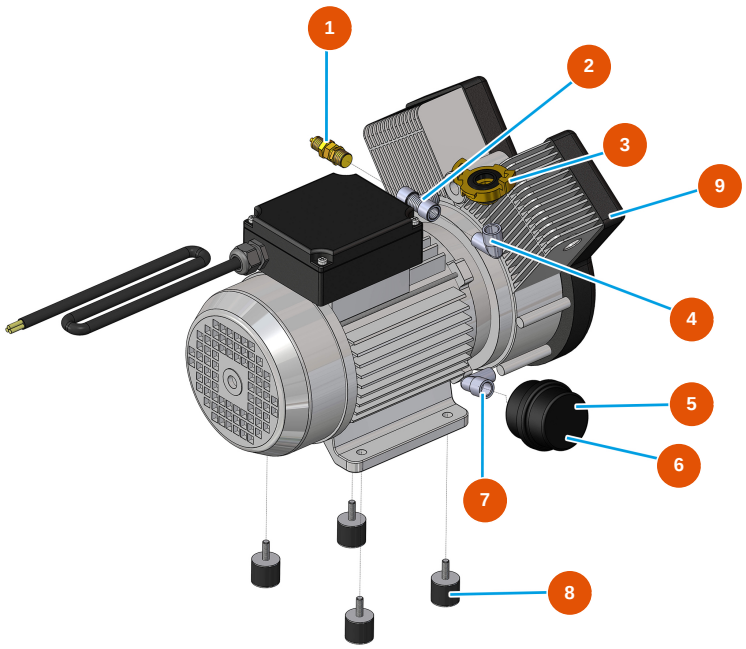

Détails des pièces

Pos.	Référence	Désignation
1	3G01300304	Safety valve 1/4" TAR.3 BAR
2	3G50300804	T - joint FMF steel 3/8
3	3A00100301	Male Geka coupling 3/8"
4	3G50300503	Steel elbow MF 3/8"
5	3B02620000	Cartridge filter holder
6	3B02620010	Filter cartridge
7	3G50300500	Stainless steel elbow joint MF 1/4"
8	3T00200402	Rubber antivibration MM M8 D30 X H40 M8X23
9	3B02500000	Single-phase compressor 2 heads 230V

Edited on 27/11/2026. Information provided for guidance only, non-contractual and subject to change without notice. In case of doubt, please contact us.