MIXER LIGHT E.W.I. continuous mixing machine - General view

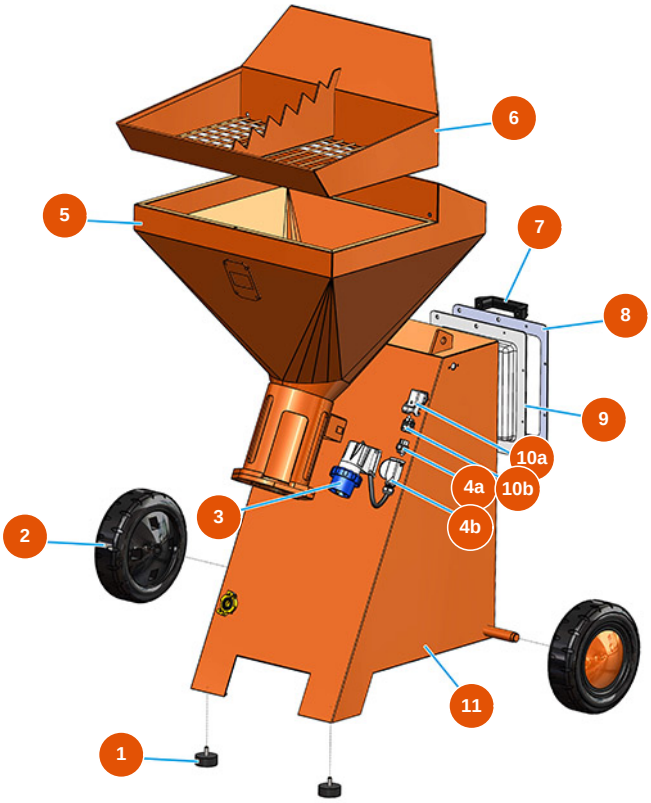

Détails des pièces

Pos.	Référence	Désignation
1	3T00200309	Anti-vibration foot 50X20M10X2
2	3F00300208	Wheel Ø260/85 mm rubber
3	3C03000103	2-pin + ground 16A surface-mount male plug
4a	3C02800102	Cover ILME CK03V PG11 without hook
4b	3C03100200	4-pin + ground CKM04 male insert
5	701202910A	5
6	701750800A	Bag Cutter Grid for LIGHT
7	3M00500114	Lifting handle
8	404400280A	Control panel frame LIGHT
9	4044001200	Control panel cover LIGHT 2013
10a	3C02800500	Bend socket base CK03IA
10b	3C02700200	4-pin + ground 10A female insert
11	701203000A	Trolley LIGHT 2013

Edited on 26/11/2026. Information provided for guidance only, non-contractual and subject to change without notice. In case of doubt, please contact us.