OPTIMIX 50 spraying machine - CHASSIS

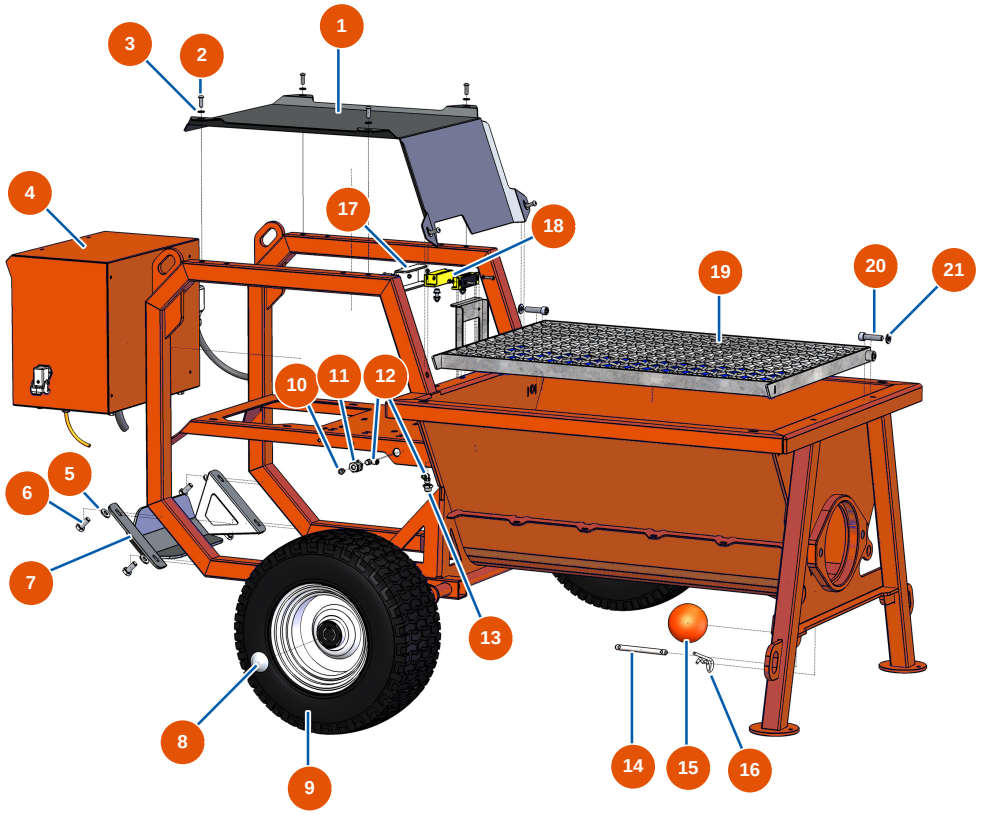

Détails des pièces

Pos.	Référence	Désignation
1	EUC22869	1
2	EU12110	2
3	EU80259	3
4	EU20140	4
5	EU80260	ø 8 inox medium washer
6	EU11544	THEF 8 x 25 screw
7	EUC22877	7
8	EU90282	8
9	EU80372	9
10	EU20044	10
11	EU20159	11
12	EU30124	12
13	EU20084	13

Edited on 25/11/2026. Information provided for guidance only, non-contractual and subject to change without notice. In case of doubt, please contact us.

Pos.	Référence	Désignation
14	EU20060	14
15	EU20048	15
16	EU20046	16
17	EUC22878	17
18	EU12120	18
19	EUC22882	19
20	EU12522	20
21	EU30280	21

Edited on 25/11/2026. Information provided for guidance only, non-contractual and subject to change without notice. In case of doubt, please contact us.