OPTIMIX 50 spraying machine - TANK EXTENSION OPTION

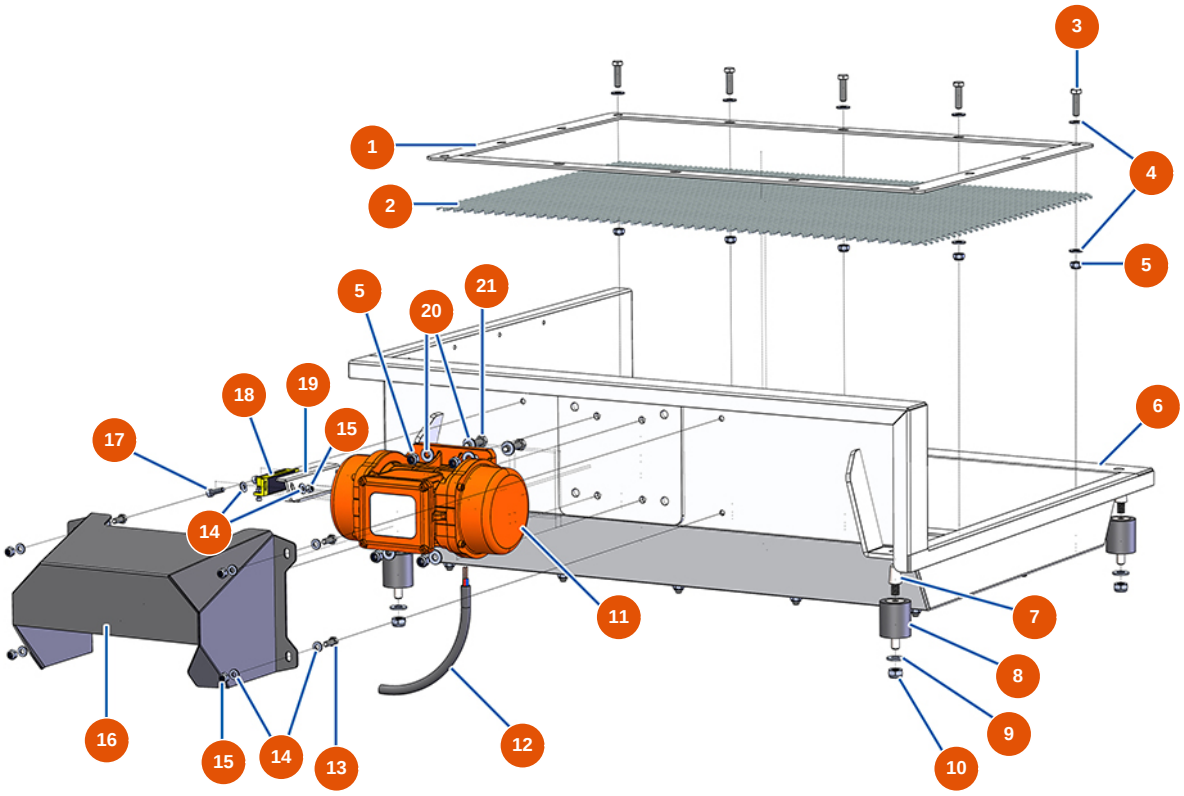

Détails des pièces

Pos.	Référence	Désignation
1	EUC22873	1
2	EUC22883	2
3	EU30205	3
4	EU30292	4
5	EU13980	5
6	EUC22872	6
7	EU20052	7
8	EU20172	8
9	EU80261	ø 10 inox medium washer
10	EU13981	10
11	EU20024	11
12	EU30018	12
13	EU12069	13

Edited on 25/11/2026. Information provided for guidance only, non-contractual and subject to change without notice. In case of doubt, please contact us.

Pos.	Référence	Désignation
14	EU80259	14
15	EU14217	M 6 nylstop inox nut
16	EUC22874	16
17	EU90996	6 x 20 inox cylindrical head screw
18	EU12120	18
19	EUC23008	19
20	EU80260	ø 8 inox medium washer
21	EU11545	21

Edited on 25/11/2026. Information provided for guidance only, non-contractual and subject to change without notice. In case of doubt, please contact us.