MIXER 80 sequential mixer - Transmission

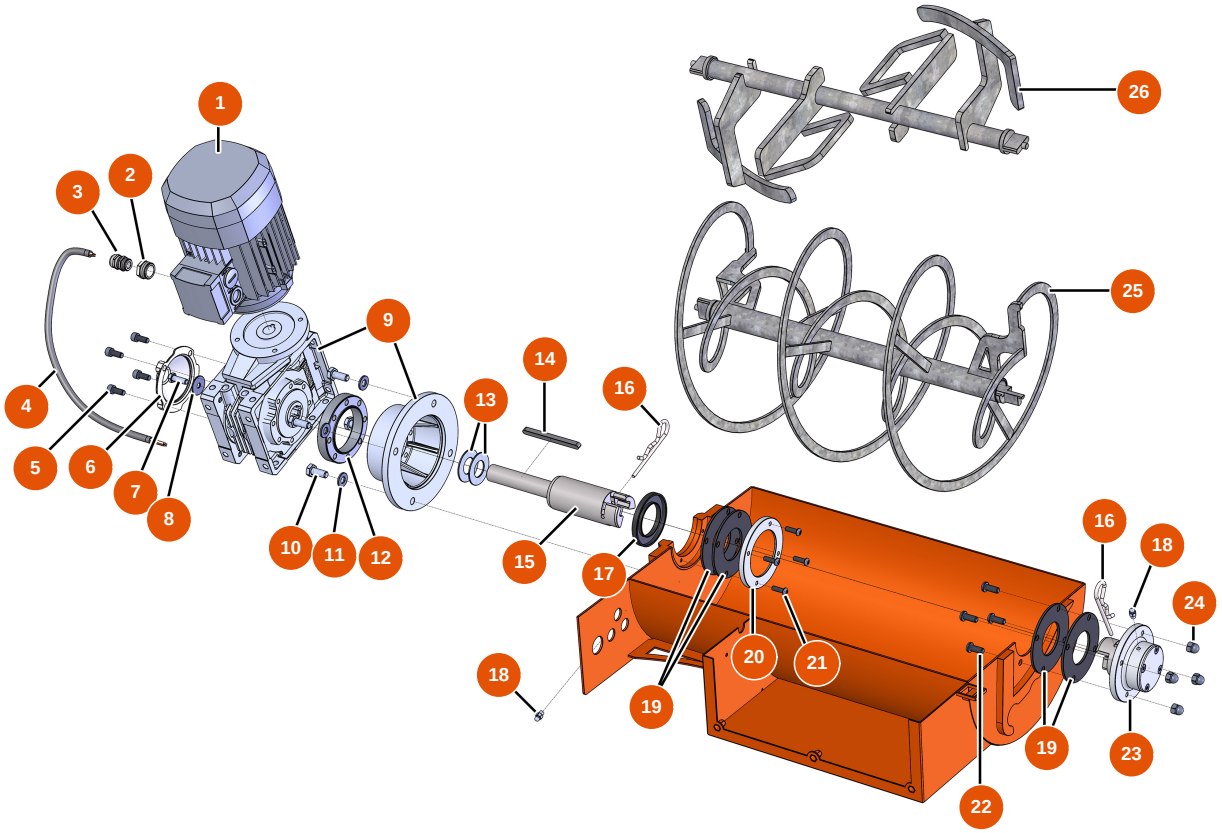

Détails des pièces

Pos.	Référence	Désignation
1	EU30043	1
2	EU80446	2
3	EU30082	3
4	EU90606	4
5	EU12249	5
6	EU80287	6
7	EU11544	THEF 8 x 25 screw
8	EU80263	8
9	EU11513	9
10	EU30257	10
11	EU80261	ø 10 inox medium washer
12	EU11524	12
13	EUC20657	13

Edited on 26/11/2026. Information provided for guidance only, non-contractual and subject to change without notice. In case of doubt, please contact us.

Pos.	Référence	Désignation
14	EU90750	14
15	EUM10063	15
16	EU12157	16
17	EU70107	17
18	EU60012	18
19	EU12042	19
19	EUM07013	19
20	EUM10065	20
21	EU12110	21
22	EU12111	8 x 20 inox cylindrical pan head screw
23	EUM07013	23
24	EU30253	24
25	EUC20233	25
26	EUC20260	26

Edited on 26/11/2026. Information provided for guidance only, non-contractual and subject to change without notice. In case of doubt, please contact us.