MIXER 100 sequential mixer - Chassis

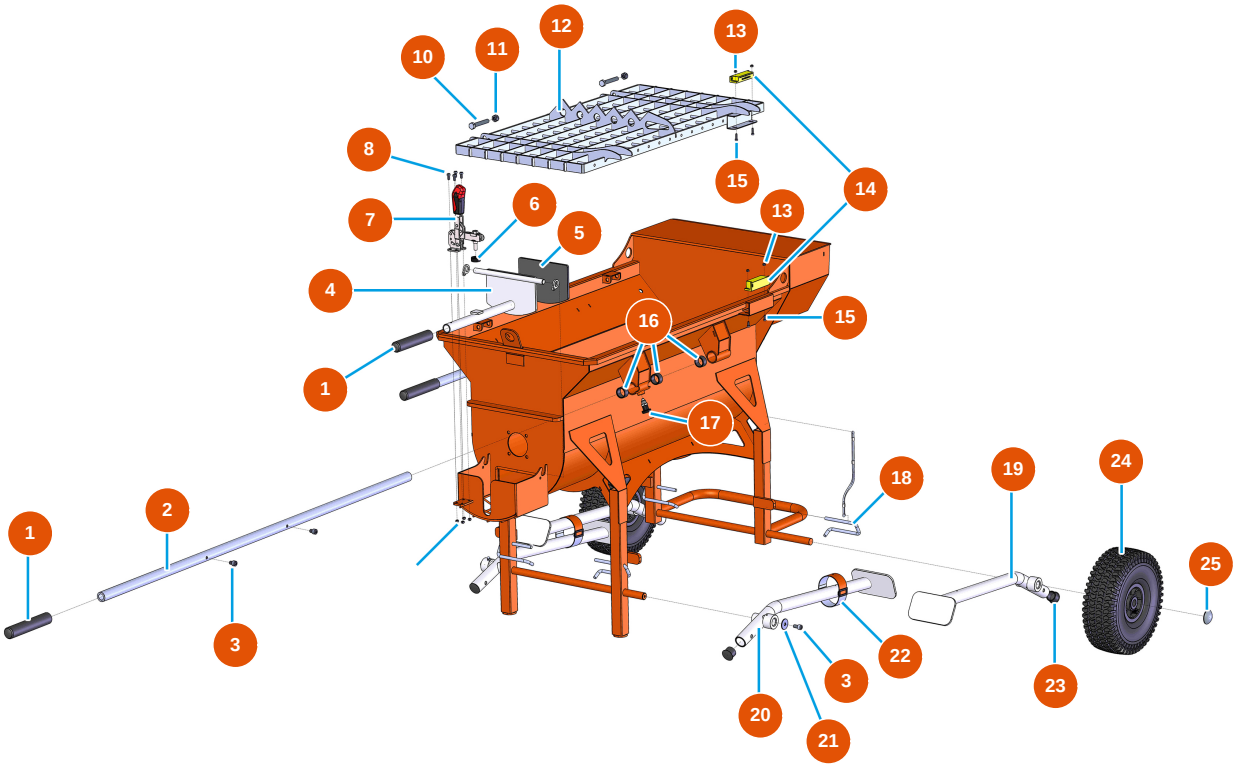

Détails des pièces

Pos.	Référence	Désignation
1	EU90255	1
2	EUC21327	2
3	EU90151	3
4	EUC20201	4
5	EU12231	5
6	EU12219	6
7	EU12142	7
8	EU90161	M5 x 12 cylindrical head screw - CP 60 cylindrical head screw
10	EU12163	10
11	EU13981	11
12	EUC20200	12
13	EU30266	13
14	EU12120	14

Edited on 26/11/2026. Information provided for guidance only, non-contractual and subject to change without notice. In case of doubt, please contact us.

Pos.	Référence	Désignation
15	EU90137	15
16	EU13453	16
17	EU13454	17
18	EUC20226	18
19	EUC20202	19
20	EUC20204	20
21	EU80263	21
22	EU12204	22
23	EU13693	23
24	EU90692	24
25	EU90282	25

Edited on 26/11/2026. Information provided for guidance only, non-contractual and subject to change without notice. In case of doubt, please contact us.