MIXER 100 sequential mixer - Hydraulic circuit

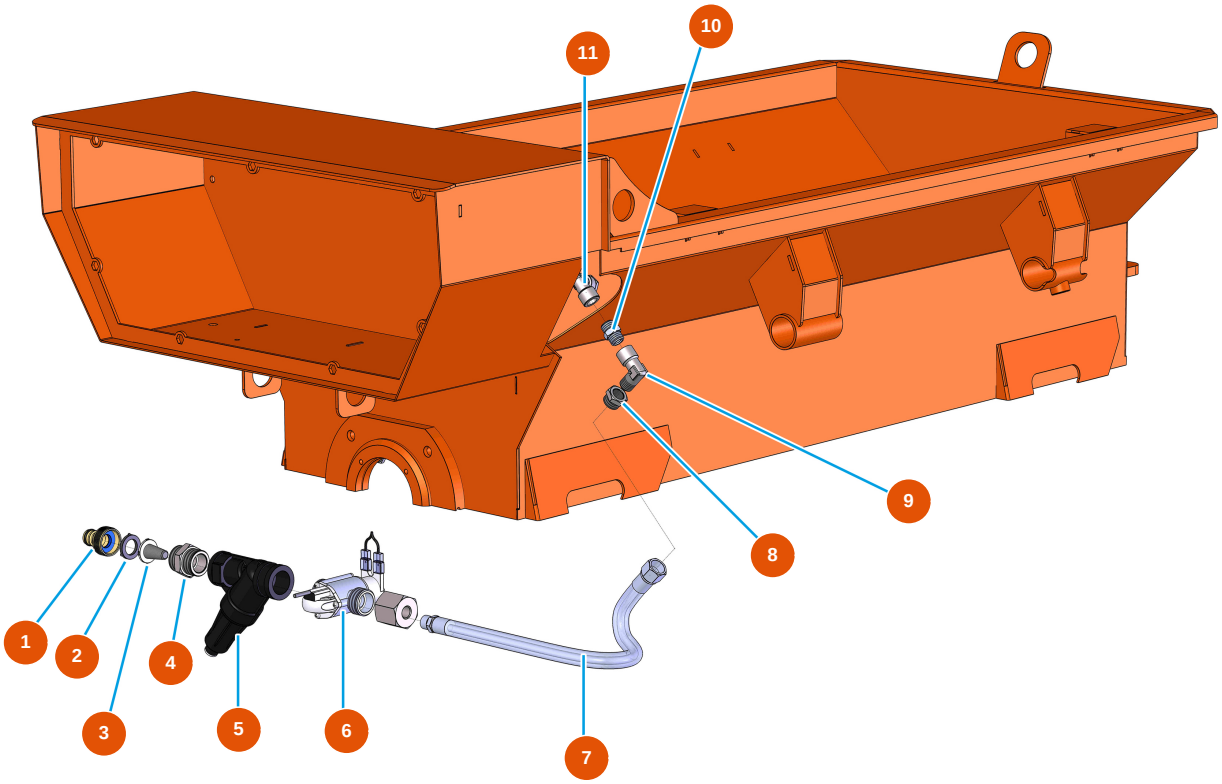

Détails des pièces

Pos.	Référence	Désignation
1	EU80124	1
2	EU11618	2
3	EU80128	3
4	EU12589	4
5	EU12066	5
6	EU14241	6
7	EU12280	7
8	EU90242	8
9	EU30121	9
10	EU90844	10
11	EU11669	11

Edited on 26/11/2026. Information provided for guidance only, non-contractual and subject to change without notice. In case of doubt, please contact us.