MIXER 100 sequential mixer - Electrical box

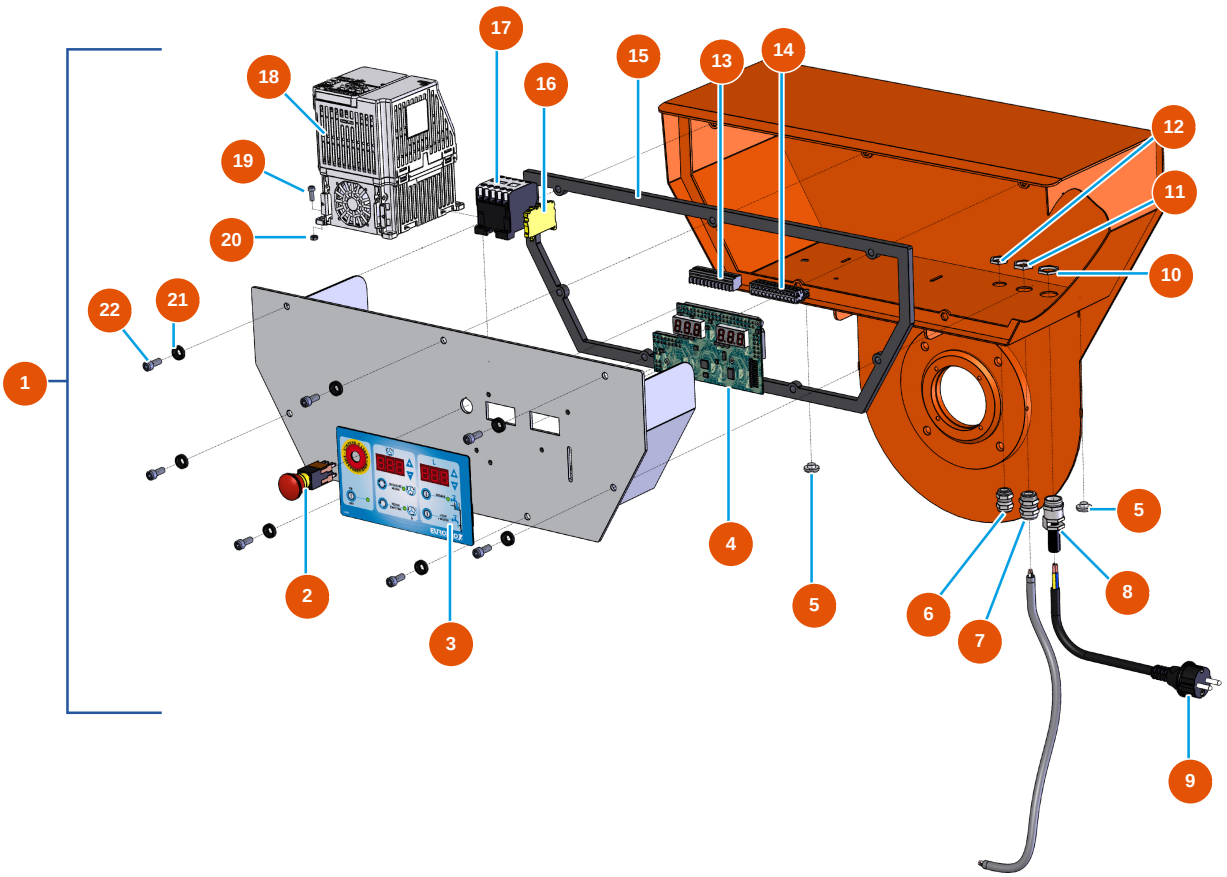

Détails des pièces

Pos.	Référence	Désignation
1	EU13025	1
2	EU13015	2
3	EU13007	3
4	30673	4
5	80397	5
5	EU80397	5
6	EU80445	6
7	EU30040	7
8	EU80451	Brass cable gland of 13 for power cable
9	EU90214	Power cable with molded plug 3G 2,5 mm²
10	EU30054	10
11	EU30333	11
12	EU11327	12

Edited on 26/11/2026. Information provided for guidance only, non-contractual and subject to change without notice. In case of doubt, please contact us.

Pos.	Référence	Désignation
13	EU11771	13
14	EU11772	14
15	12138	15
16	30038	16
17	EU11918	17
18	EU80458	18
19	EU12444	19
20	EU10038	20
21	EU80573	21
22	EU90157	22

Edited on 26/11/2026. Information provided for guidance only, non-contractual and subject to change without notice. In case of doubt, please contact us.