MIXER VERTIGO electric trowel - 230 V - Electrical Group

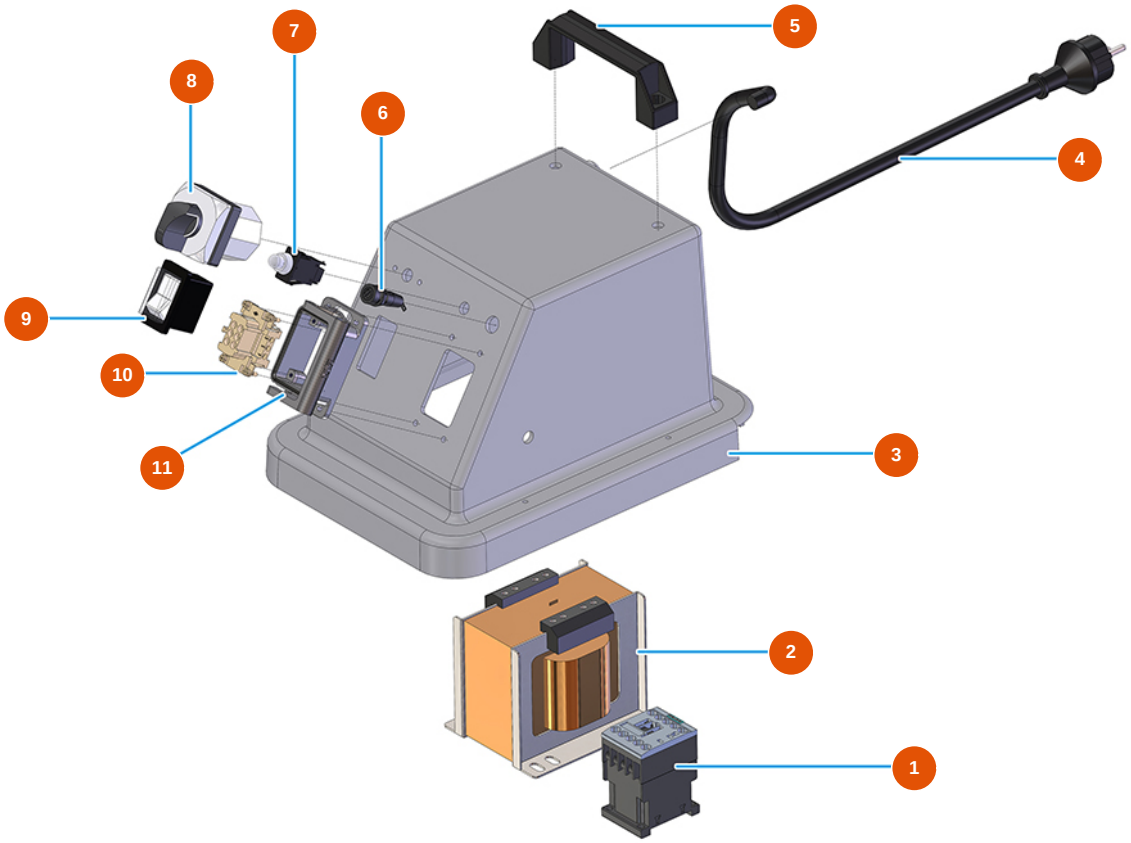

Détails des pièces

Pos.	Référence	Désignation
1	3C00700117	Counter 4 KW 24V AC SIEMENS
2	3C00502025	Trowel transformer VERTIGO 3 speeds
3	3M00500405	Half-shell cover trowel VERTIGO
4	3M00501200	SCHUKO plug with trowel power cable VERTIGO
5	3M00500114	Lifting handle
6	3C05050900	Fuse holder P4000 VERTIGO trowel
7	3C00800800	Thermoprotector VERTIGO trowel
8	3M00300403	Gradual trowel switch VERTIGO
9	3M00500111	Main switch trowel VERTIGO
10	3C02700300	6-pin 16A female insert
11	3C02800503	Socket base 6 pin TCHI 06 L

Edited on 26/11/2026. Information provided for guidance only, non-contractual and subject to change without notice. In case of doubt, please contact us.