MIXER VERTIGO electric trowel - 110 V 50 Hz - Water Group

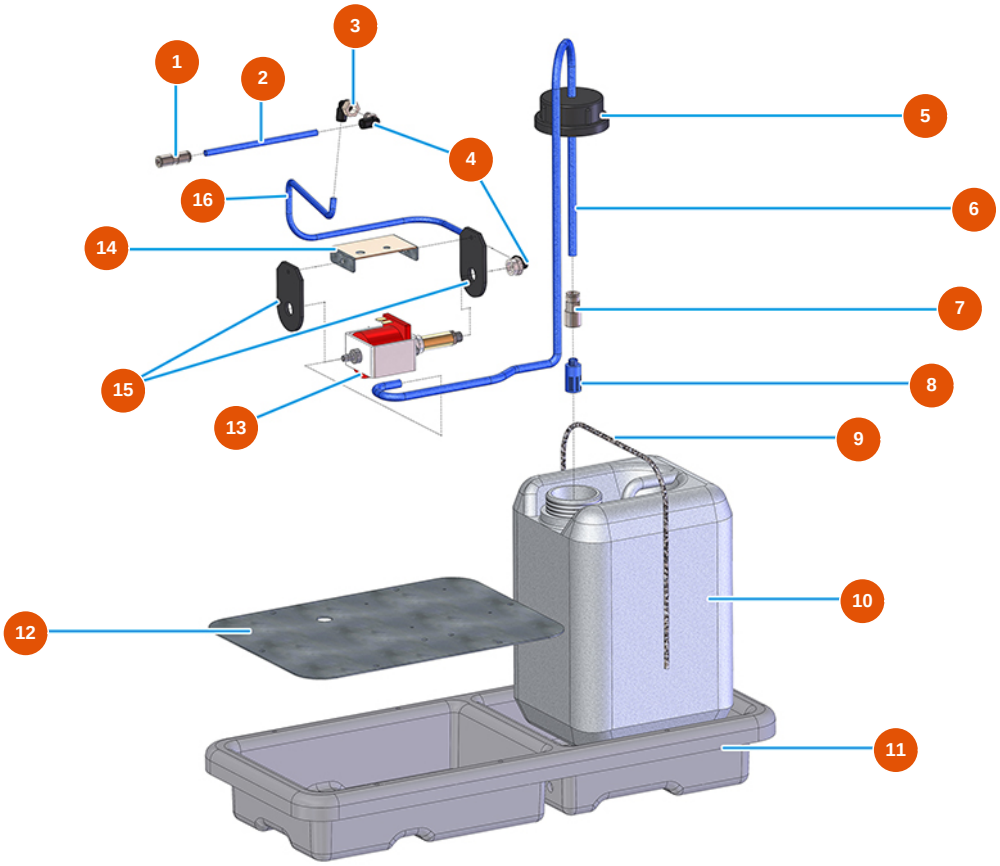

Détails des pièces

Pos.	Référence	Désignation
1	3G50200502	Legris joint straight
2	3G50500203	Hose 4X2 RILSAN
3	3G50200202	Legris coupling elbow joint 6X1/8
4	3G50400201	Air connection 90GR M 1/8
5	3M00500125	Jerry can top for VERTIGO
6	3G50500103	ELASTOLLAN hose 10 x 8
7	3G50200108	Legris coupling in-line 8 X 1/4 fem.
8	3M00500115	Water filter VERTIGO
9	3M00500201	Elastic rope MARE MM 6
10	3M00500124	5 LT tank GR.250 neutral VERTIGO
11	3M00500404	Half-shell VERTIGO
12	4902020000	Galvanized bottom plate
13	3M00301501	Water pump 24V ME023

Edited on 17/04/2026. Information provided for guidance only, non-contractual and subject to change without notice. In case of doubt, please contact us.

Pos.	Référence	Désignation
14	4902020200	VERTIGO galv. pump holder plate
15	3M00301502	Stand. antivibrating for pump
16	3G50400201	Air connection 90GR M 1/8

Edited on 17/04/2026. Information provided for guidance only, non-contractual and subject to change without notice. In case of doubt, please contact us.